Lead-Free Flex™

TWIN CITY HOSE, INC.

UL CLASSIFIED MH59973

UL TCHS-SFLG 3/4" OFFSET

CLASSIFIED C UL US

WATER QUALITY

DRINKING WATER SYSTEM COMPONENT
NSF/ANSI 61, NSF/ANSI 372

MH59973

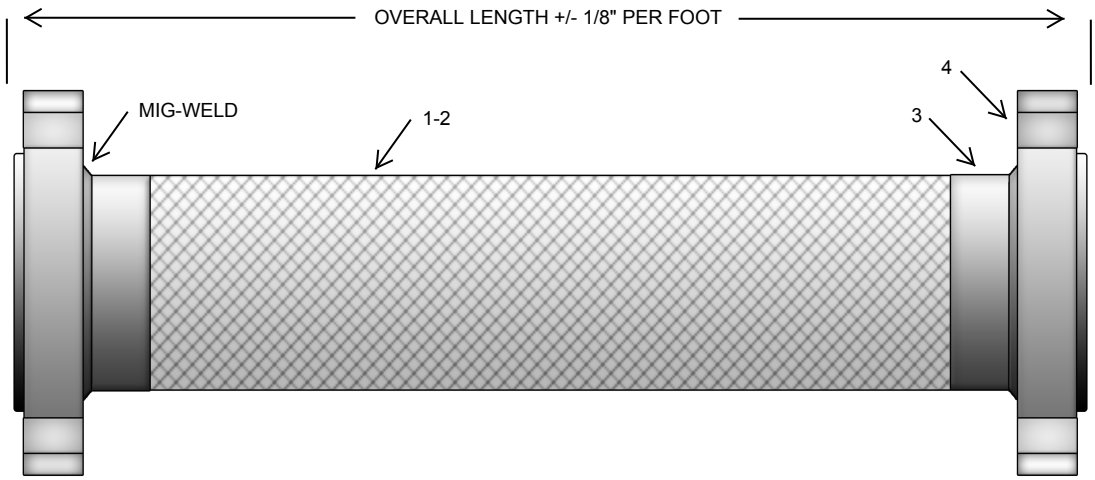

MATERIALS

#1-2 HOSE & BRAID: T-321 STAINLESS STEEL HOSE WITH 1-LAYER OF T-304 STAINLESS STEEL BRAID

#3 BRAID COLLAR: T-304 STAINLESS STEEL

#4 END FITTING: 150# STAINLESS STEEL RAISED FACE SLIP ON FLANGE

QTY	MODEL NUMBER	SIZE	OAL	MAX O.D.	MAX WRK. PSIG	MAX TEST	@ TEMP.	LATERAL OFFSET	WT. LBS.
	UL-TCHS-150-SFLG-12	1 ½"	12"	1.95"	565	850	70° F	3/4"	8
	UL-TCHS-200-SFLG-12	2"	12"	2.58"	500	750	70° F	3/4"	10
	UL-TCHS-250-SFLG-12	2 ½"	12"	3.45"	400	600	70° F	3/4"	13
	UL-TCHS-300-SFLG-13	3"	13"	4.01"	288	431	70° F	3/4"	15
	UL-TCHS-400-SFLG-14	4"	14"	5.03"	250	375	70° F	3/4"	21
	UL-TCHS-500-SFLG-15	5"	15"	6.10"	200	300	70° F	3/4"	31
	UL-TCHS-600-SFLG-16	6"	16"	7.15"	175	263	70° F	3/4"	37
	UL-TCHS-800-SFLG-18	8"	18"	9.44"	212	318	70° F	3/4"	65
	UL-TCHS-1000-SFLG-20	10"	20"	11.49"	175	263	70° F	3/4"	90
	UL-TCHS-1200-SFLG-21	12"	21"	13.51"	160	240	70° F	3/4"	140

TEMPERATURE DERATING FACTORS: MULTIPLY X WRK. PSIG									
200° F	250° F	300° F	350° F	400° F	500° F	600° F	700° F		
0.94	0.92	0.88	0.86	0.83	0.78	0.74	0.7		

DRAWN BY: _____ **DRAWING NUMBER:** _____ **REV:** _____

SIGNATURE: _____ **DATE:** _____

PO NUMBER: _____ **PROJECT:** _____

CUSTOMER: _____ **NOTES:**

20615 Commerce Blvd., Rogers, MN 55374 P 1-800-670-9475 F 763-428-5111 E sales@twincityhose.com W www.twincityhose.com